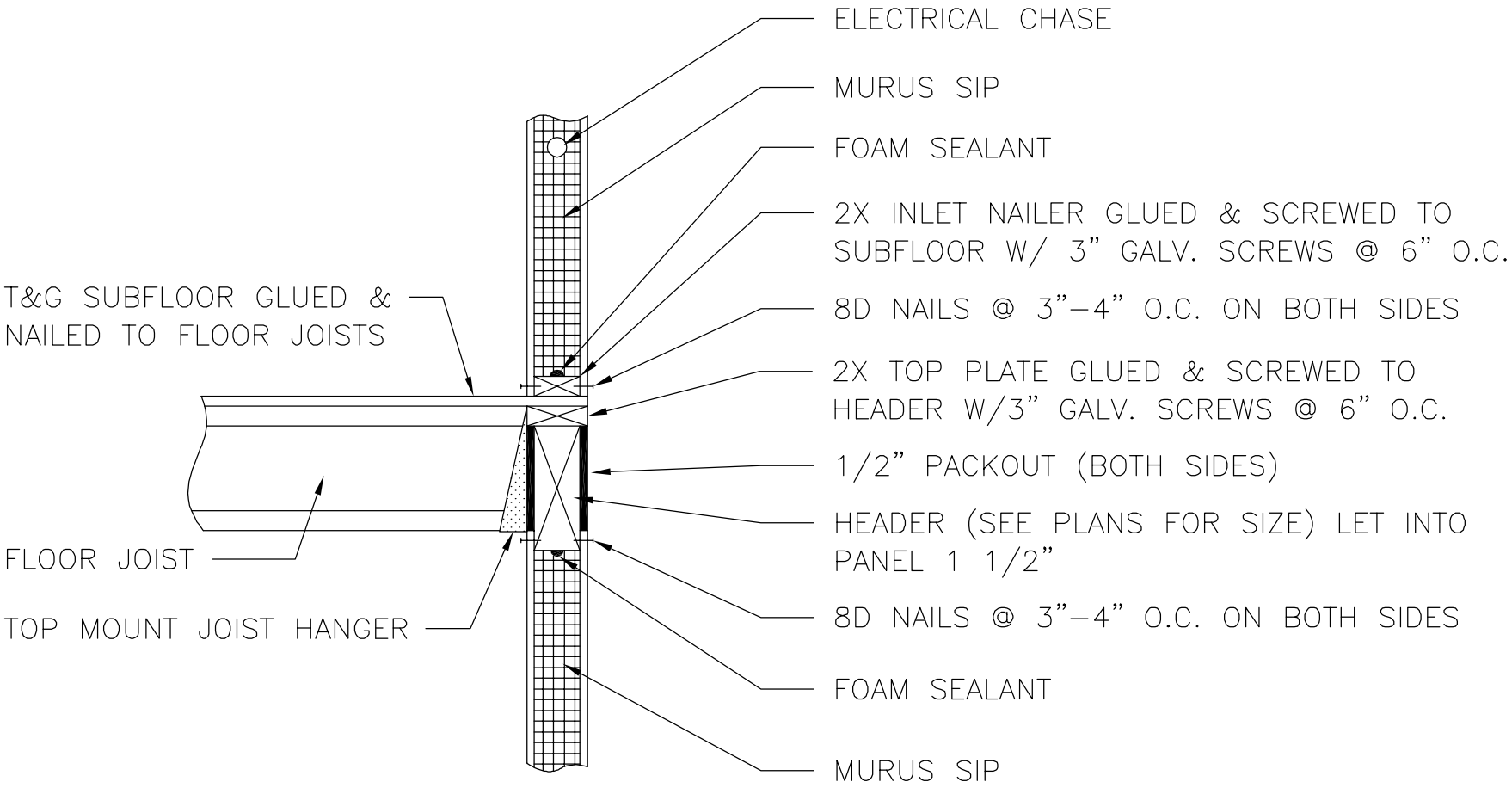

30 HEADER IN SECOND FLOOR SYSTEM

THE MURUS COMPANY