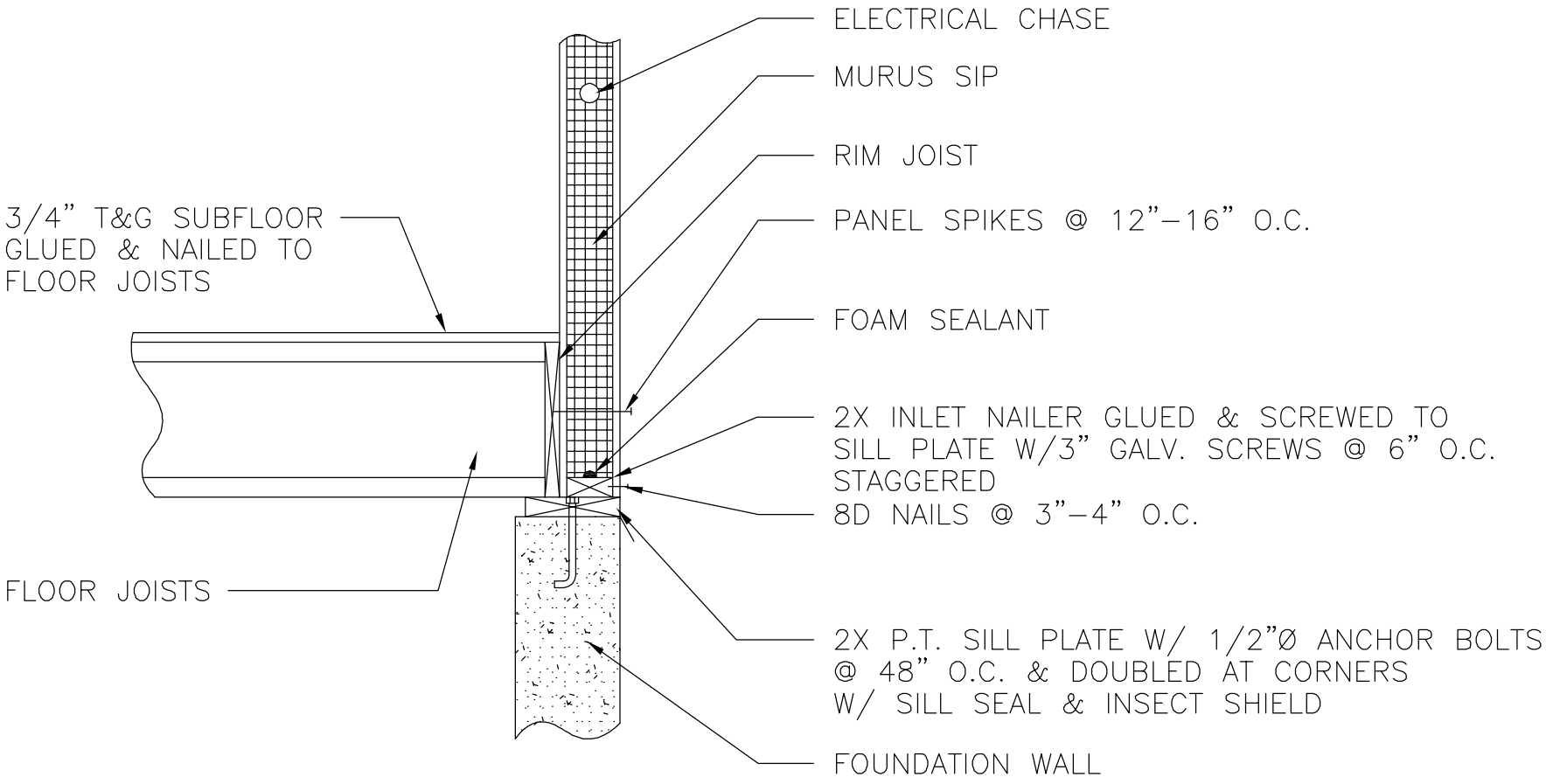

1 WRAPPED DECK – FIRST FLOOR

THE MURUS COMPANY